AVDASI 3
(CADE 30007)
Gas Turbine Propulsion

Week 19: Lecture 6

Axial Compressors

Lecturer:

Dr Daniele Zagaglia

daniele.zagaglia@bristol.ac.uk

Unit Director:

Dr. Samudra Dasgupta

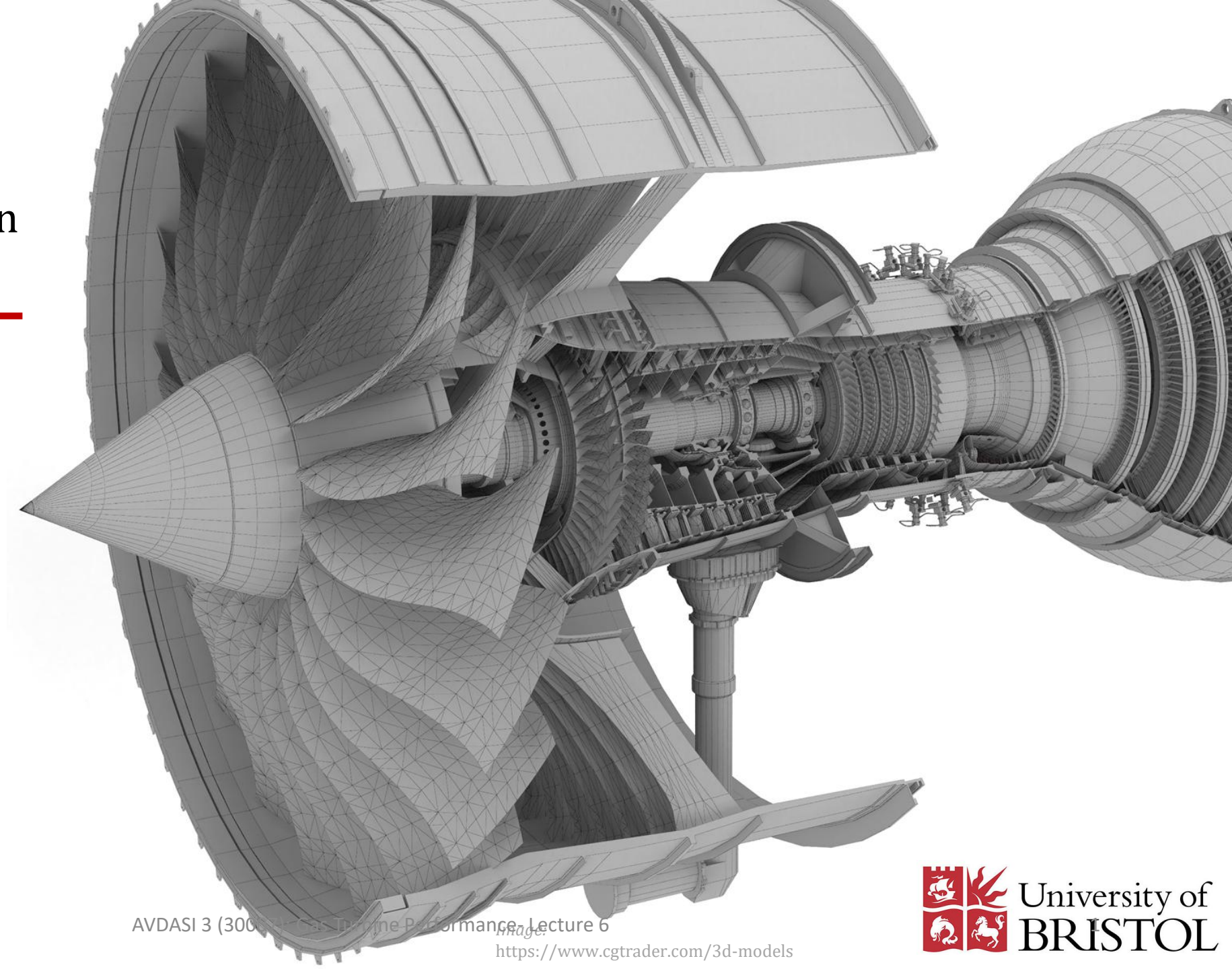

Image: https://www.cgtrader.com/3d-models

University of BRISTOL

Learning Objectives for Lecture 7

University of BRISTOL

- The ‘simple’ analysis of an Axial Compressor

Turbomachinery: Introduction

- The **compressor** raises the pressure of the air before combustion
- The **turbine** extracts work from the hot high pressure combustion products to drive the compressor

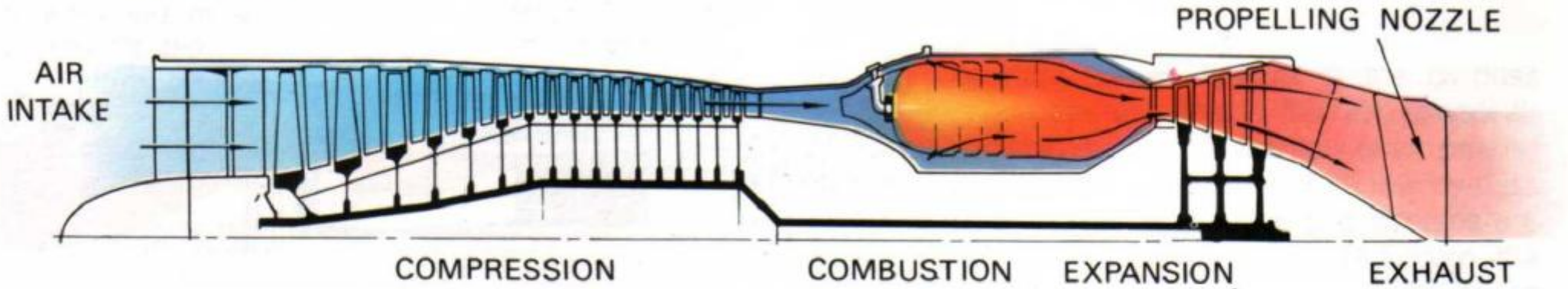

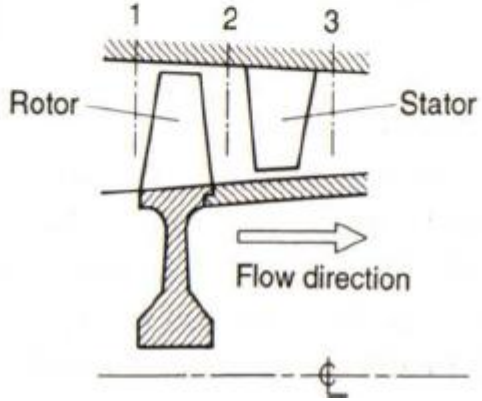

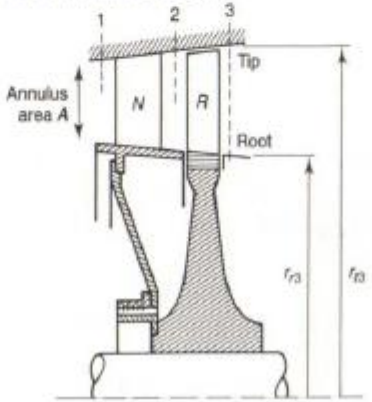

Each stage consists of a row of rotor blades followed by a row of stator blades
Often preceded by an inlet guide vane

Each stage consists of a row of Nozzle Guide Vanes which direct the gas onto the rotor blade

Comparison of compressor & turbine blades

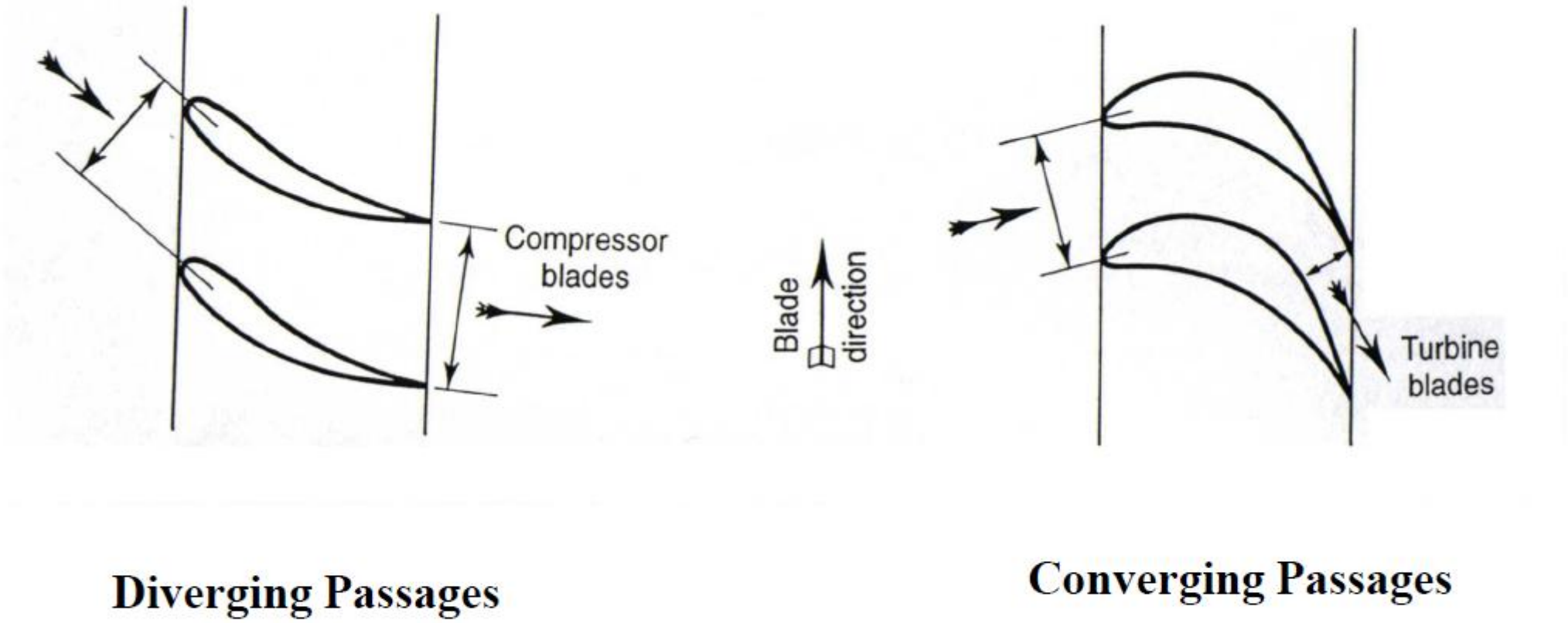

On both stator & rotor blades

Isentropic & Polytropic Efficiency 1

University of BRISTOL

Polytropic or "Small Stage" Efficiency

The isentropic efficiency of an elemental stage, such that it is constant throughout the whole process:

For compression: $\eta_{pol} = \dfrac{dT_o'}{dT_o} = \textbf{Constant}$

For an isentropic process: $\dfrac{T_o}{p_o^{\gamma-1/\gamma}} = \textbf{Constant}$

The Differential form being: $\dfrac{dT_o'}{T_o} = \dfrac{\gamma}{\gamma-1}\dfrac{dp_o}{p_o}$

Isentropic & Polytropic Efficiency 2

University of BRISTOL

Polytropic or "Small Stage" Efficiency

The isentropic efficiency of an elemental stage, such that it is constant throughout the whole process:

The Differential form being: $\frac{dT_o'}{T_o} = \frac{\gamma}{\gamma - 1}\frac{dp_o}{p_o}$

Substituting for dT_o' gives $\eta_{pol}\frac{dT_o}{T_o} = \frac{\gamma}{\gamma - 1}\frac{dp_o}{p_o}$

Integrating from 1 to 2 gives $\frac{T_{o2}}{T_{o1}} = \left(\frac{p_{o2}}{p_{o1}}\right)^{\frac{\gamma-1}{\gamma\eta_{pol}}}$

Representative of aerodynamic quality and "technology level"

Isentropic & Polytropic Efficiency 3

University of BRISTOL

Isentropic Efficiency $\eta_{isen} = \dfrac{T'_{O2} - T_{O1}}{T_{O2} - T_{O1}}$

Overall Efficiency of compressors of identical aerodynamic quality reduces as overall pressure ratio increases. In a multi stage axial compressor of equal aerodynamic quality i.e. a similar ΔT_0 per stage, the pressure ratio per stage decreases.

Example: Consider a multi stage axial compressor with 5 stages. A stage is added of the same aerodynamic quality i.e. same polytropic efficiency (85%) & ΔT_0 per stage :

Stages	OPR	Overall η_{isen}	Pressure Ratio last stage	Average Stage Pressure Rise
5	4.8	81.4	1.29	1.37
6	6.07	80.9	1.26	1.35

Isentropic & Polytropic Efficiency 4

University of BRISTOL

Polytropic or "Small Stage" Efficiency

This removes the penalty for higher pressure ratios and allows compressors of differing aerodynamic quality and pressure ratio to be compared:

$$\frac{T_{O2}}{T_{O1}} = \left(\frac{p_{O2}}{p_{O1}}\right)^{\frac{\gamma-1}{\gamma\eta_{pol}}}$$

Polytropic Efficiency

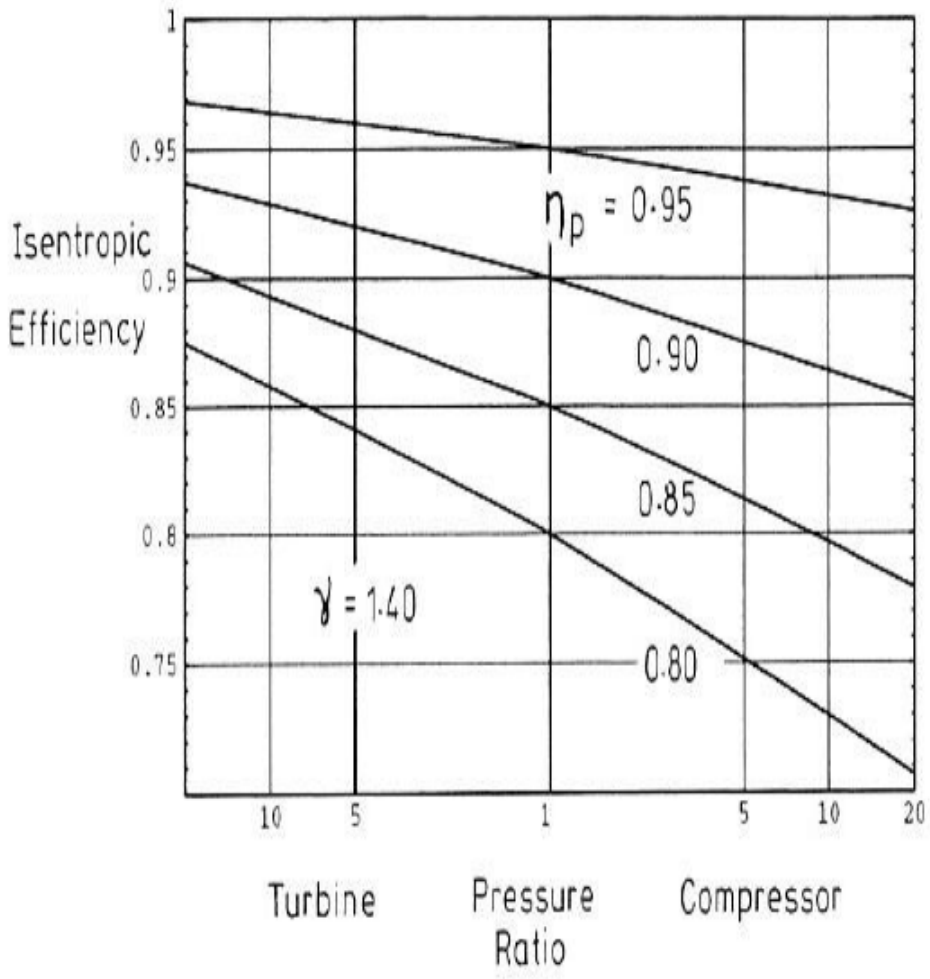

Jet Propulsion
Cumpsty, (p124)

Hence, for a fixed η_{poly}, η_{isen} reduces as pressure ratio increases

Polytropic efficiency is a more fundamental concept than isentropic efficiency and is representative of compressor technology level

Euler Work Equation

Applicable to both compressors & turbines

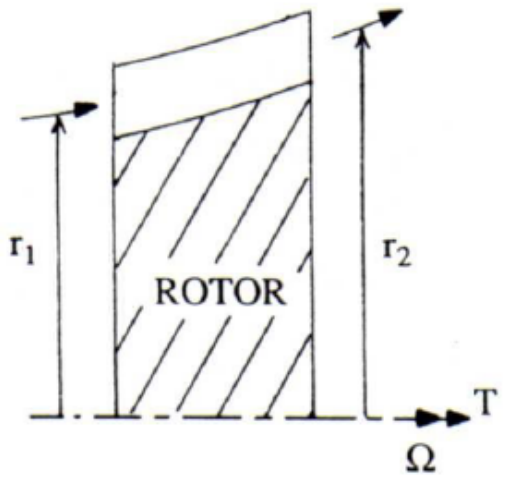

Consider an elemental mass $\delta\dot{m}$ entering rotor in steady flow conditions.
In time δt an equal mass must leave.

Moment of momentum of entering fluid at r_1 about axis of rotation:

$$\mathbf{M_1} = \delta\dot{m} \cdot r_1 \cdot C_{w1}$$

Corresponding moment of momentum of leaving fluid at r_2:

$$\mathbf{M_2} = \delta\dot{m} \cdot r_2 \cdot C_{w2}$$

Since Torque = Rate of change of moment of momentum, then:

$$T = \dot{m}\,(r_2 \cdot C_{w2} - r_2 \cdot C_{w1})$$

Euler Work Equation

Applicable to both compressors & turbines

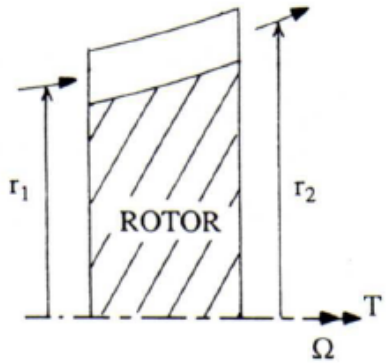

Power is then given by the Euler Equation:

$$P_{ow} = T \cdot \omega \quad \& \quad U = r \cdot \omega$$

So then:

$$P_{ow} = T \cdot \omega = \dot{m}\,(U_2 \cdot C_{w2} - U_1 \cdot C_{1w})$$

Where U_1 & U_2 are the speed of the blade row at inlet & outlet.

Work Input per unit mass is equal to the change in stagnation enthalpy per unit mass:

$$\Delta h_0 = C_p(T_{02} - T_{01}) = U_2 \cdot C_{w2} - U_1 \cdot C_{1w}$$

In most cases we can assume that $r_1 = r_2$, hence $U_1 = U_2 = U$:

$$\Delta h_0 = U\,(Cw_2 - Cw_1)$$

Typical axial compressor layout

University of BRISTOL

Features of Typical Modern Axial Compressor for Aero Engine

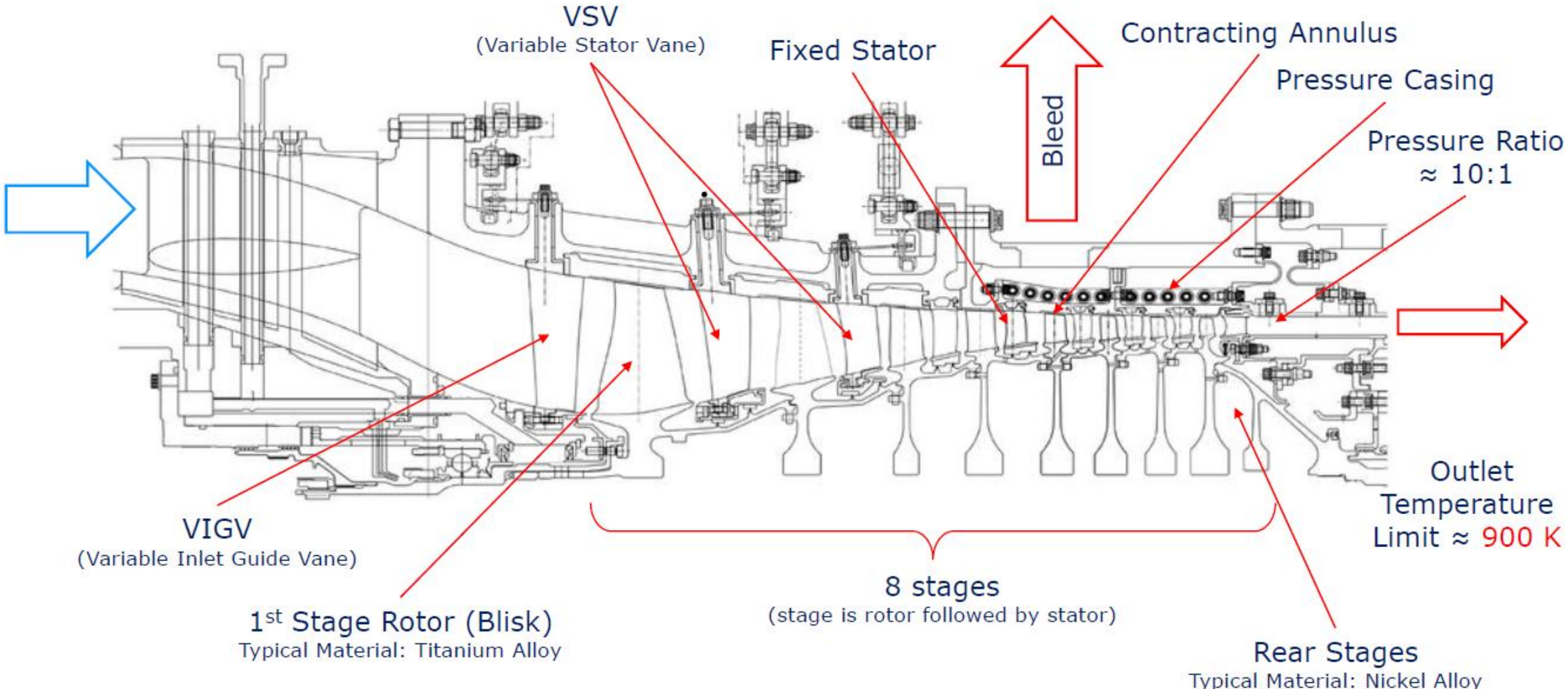

Pressure & velocity changes through an axial compressor

Principle of Compressor Operation

Single stage comprises rotor blades followed by stationary stator vanes.

Note the diverging flow passages both between the rotor blades and between the stator vanes.

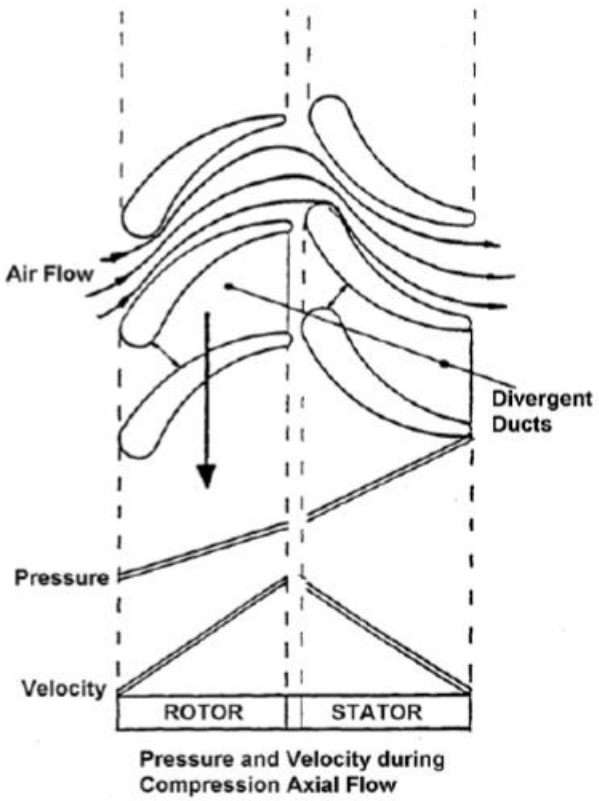

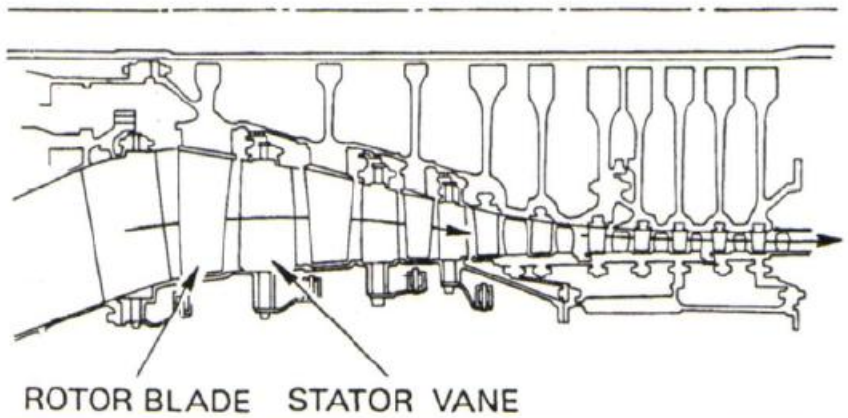

Note that cross sectional area of passage decreases from inlet to outlet.

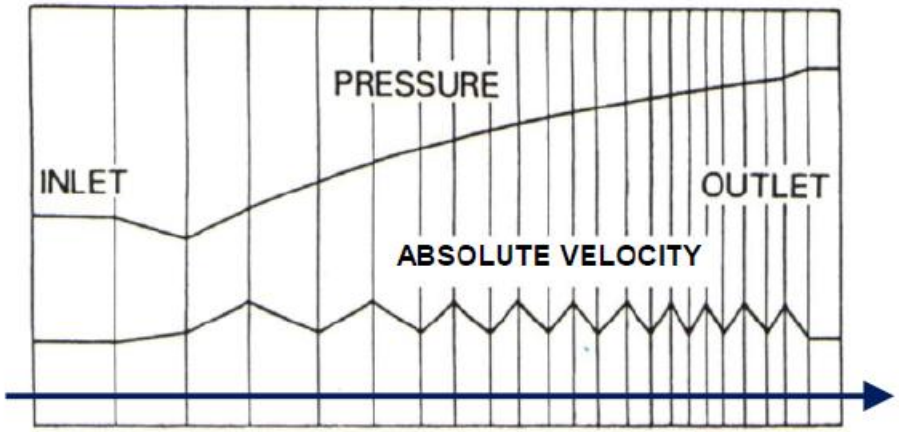

Axial velocity through compressor is kept approximately constant.

T-s diagram: single stage

Analysis of Single Stage for an Axial Compressor:

<u>POWER ABSORBED</u>

Steady Flow Energy Equation:

For *Rotor* (absorbs all power):

$$P_{ow} = \dot{m} \cdot C_p(T_{02} - T_{01})$$

For *Stator*

$$P_{ow} = 0$$

Hence $T_{03} = T_{02}$

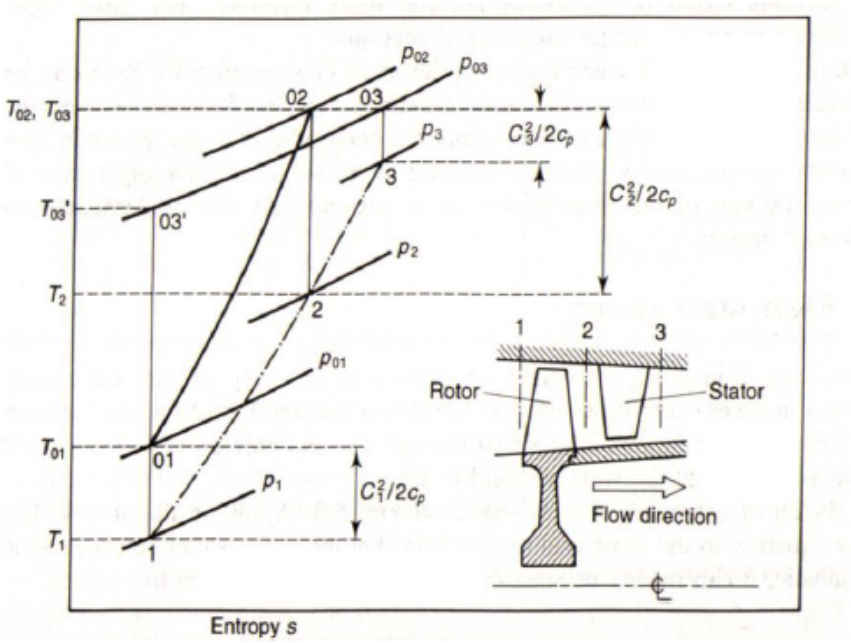

Stator transforms KE in air to increase Static Pressure at Constant Stagnation Temperature. However there are losses due to friction.

p_{02} is less than it would have been for an isentropic process and $p_{03} < p_{02}$ due to losses in stator.

Velocity Triangles: Compressor Rotor Blade

How it Works – Compressor Stage Velocity Triangles

Single compressor stage at **MEAN** radius

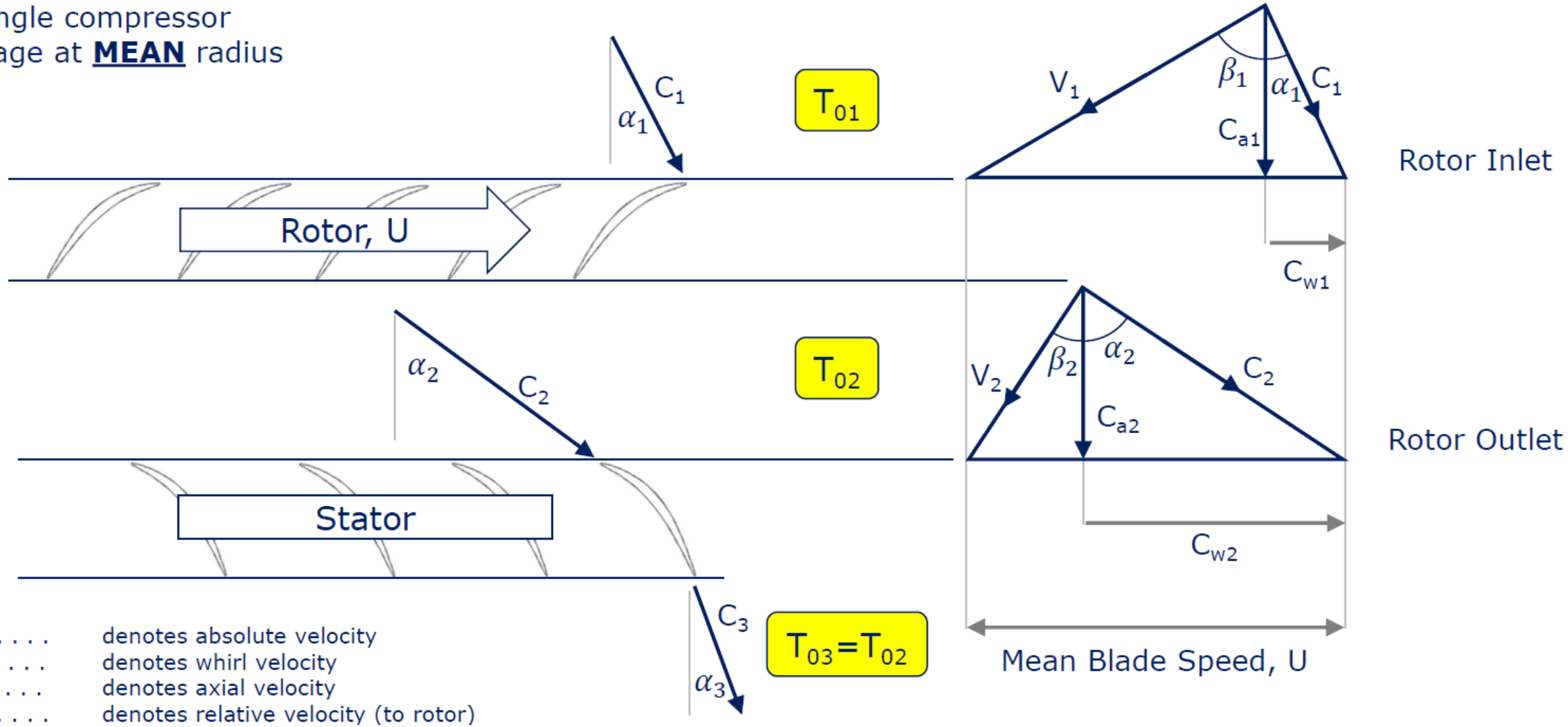

C . . . . denotes absolute velocity
C_w . . . denotes whirl velocity
C_a . . . denotes axial velocity
V . . . . denotes relative velocity (to rotor)

Velocity Triangles: Compressor Rotor Blade

Rotor Inlet
Rotor Outlet

V_2/V_1 is a measure of the diffusion in the rotor. It is called the de Haller number and should be > 0.72 to prevent excessive loss.

This is the change in whirl speed - directly related to stage ΔT_0.

C_1/C_2 is a measure of the diffusion in the stator because $C_3 = C_1$

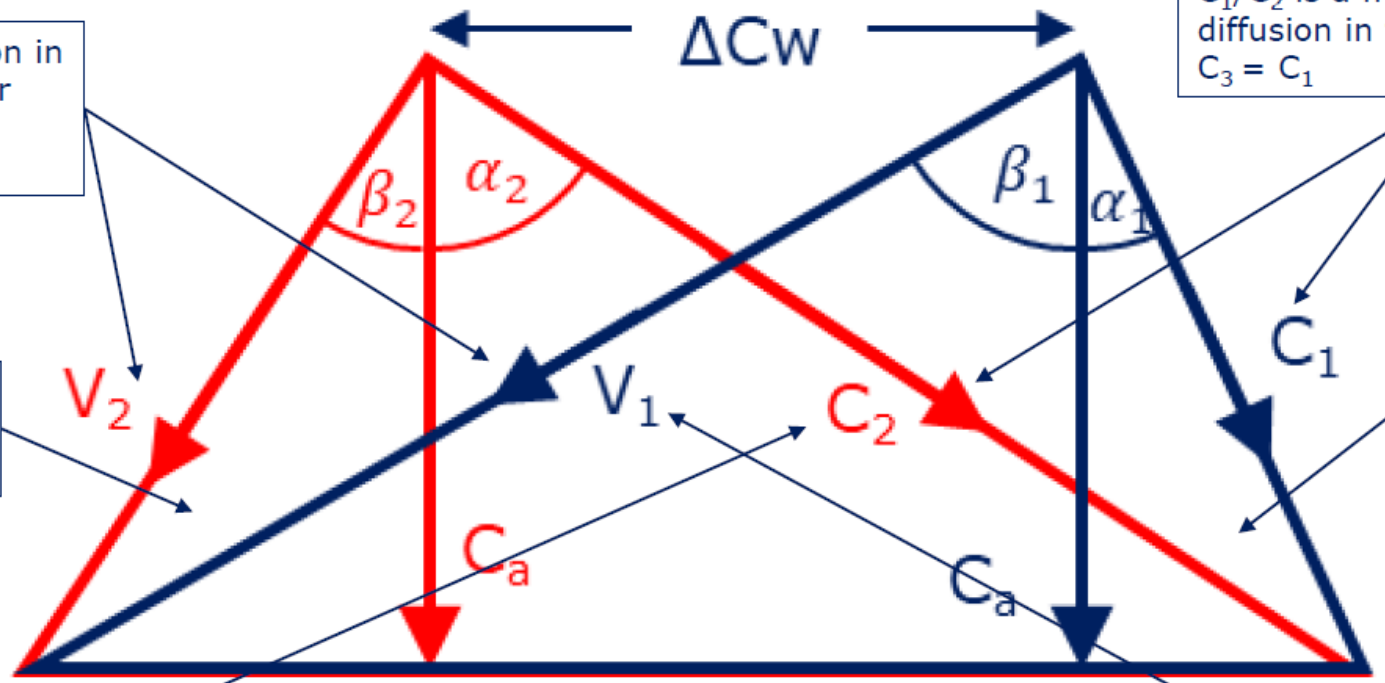

This angle is the air deflection in the rotor. 20° would be a safe value.

This angle is the air deflection in the stator because α_3 is typically same as α_1. 20° would be a safe value.

C_2 is an indicator of whether Mach at stator inlet is likely to be too high.

V_1 is an indicator of whether relative Mach at rotor inlet is likely to be too high. At this mean radius station, Mrel should be <1.

Simple Blading Analysis

From the velocity triangles:

$$\frac{U}{C_a} = (Tan\,\beta_1 + Tan\,\alpha_1) = (Tan\,\beta_2 + Tan\,\alpha_2\,)$$

By consideration of Angular Momentum (see Euler Equation) it can be shown that:

$$P_{ow} = \dot{m} \cdot U \cdot (C_{w_2} - C_{w1})$$

In terms of Axial velocity & Air angles:

$$P_{ow} = \dot{m} \cdot U \cdot C_a (Tan\,\alpha_2 - Tan\,\alpha_1)$$

or in terms of $\beta_{1:}$

$$P_{ow} = \dot{m} \cdot U \cdot C_a\,(Tan\,\beta_1 - Tan\,\beta_2\,)$$

The input Energy will be absorbed in raising pressure (useful) & overcoming frictional losses (waste).

Regardless of efficiency, <u>Power Input</u> must equal the <u>rise in Stagnation Temperature</u> of the stage.

Simple Blading Analysis

Hence:

$$\dot{m} \cdot C_p \left(T_{03} - T_{01}\right) = \dot{m} \cdot U \cdot C_a \left(Tan\ \beta_1 - Tan\ \beta_2\right)$$

Stage Temperature rise:

$$T_{03} - T_{01} = U \cdot \frac{C_a}{C_p} \cdot \left(Tan\ \beta_1 - Tan\ \beta_2\right)$$

$$\downarrow$$

$$\frac{T_{03}}{T_{01}} = 1 + U \cdot \frac{C_a}{C_p \cdot T_{01}} \cdot \left(Tan\ \beta_1 - Tan\ \beta_2\right)$$

Isentropic Efficiency:

$$\eta_s = \frac{T'_{03} - T_{01}}{T_{03} - T_{01}}$$

Hence Stage Pressure rise:

$$\frac{p_{03}}{p_{01}} = \left(1 + \eta_s \frac{\left(T_{03} - T_{01}\right)}{T_{01}}\right)^{\frac{\gamma}{\gamma-1}} \qquad \frac{p_{03}}{p_{01}} = \left(1 + \frac{\eta_s U Ca\left(\tan\beta_1 - \tan\beta_2\right)}{C_p T_{01}}\right)^{\frac{\gamma}{\gamma-1}}$$

Or using Polytropic Efficiency:

$$\frac{p_{03}}{p_{01}} = \left(1 + \frac{U Ca\left(\tan\beta_1 - \tan\beta_2\right)}{C_p T_{01}}\right)^{\frac{\eta_p \gamma}{\gamma-1}}$$

Factors effecting Stage Pressure Ratio

$$\frac{p_{03}}{p_{01}} = \left(1 + \frac{UCa(\tan\beta_1 - \tan\beta_2)}{C_p T_{01}}\right)^{\frac{\eta_p \gamma}{\gamma - 1}}$$

- Blade Speed
- Axial velocity
- High Deflection in Rotor Blades
- Efficiency

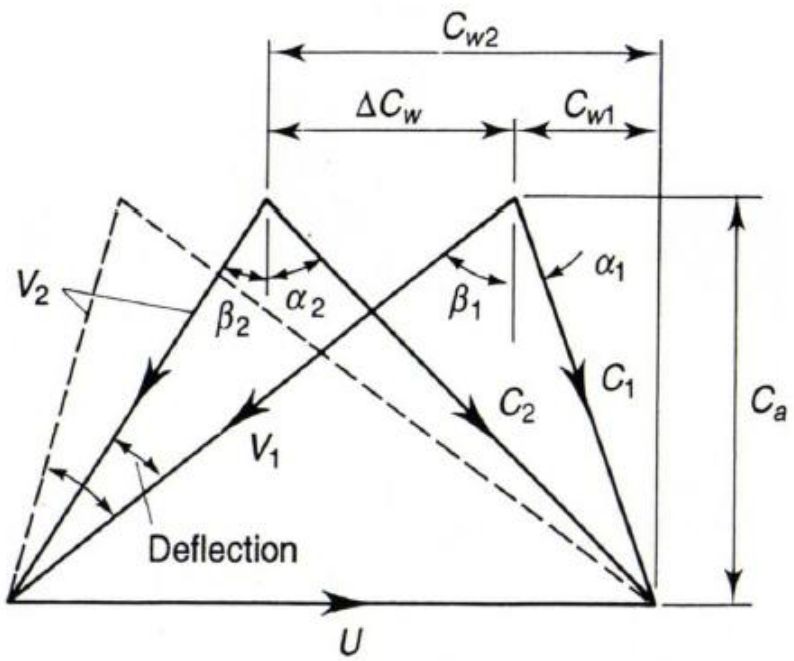

Effect of increasing deflection

de Haller Number = V_2 / V_1

For minimum losses $V_2 / V_1 > 0.72$

Compressor Reaction

Reaction, R, is defined as:

$$R = \frac{Static\ Enthalpy\ Rise\ in\ Rotor}{Static\ Enthalpy\ Rise\ in\ Stage} = \frac{\Delta h_{rotor}}{\Delta h_{statge}} = \frac{\Delta T_{rotor}}{\Delta T_{stage}}$$

Because $\Delta T_{stage} = \Delta T_0 = T_{03} - T_{01} = T_{02} - T_{01}$ if assume C1=C3

$$R = \frac{\Delta T_{rotor}}{\Delta T_0}$$

And, from previously, $\Delta T_0 = \frac{U.\ C_a}{C_p}(\tan\beta_1 - \tan\beta_2)$

$$\Delta T_{rotor} = \Delta T_0 - \frac{1}{2C_P}(C_2^2 - C_1^2)$$

With reference to the velocity triangles and use of trigonometry:

$$R = \frac{C_a}{2U}(\tan\beta_1 + \tan\beta_2)$$

N.B.
T is static temperature
T_0 is total temperature

Reaction > 50% means most of the static pressure rise is being done in the rotor.

Reaction < 50% means most of the static pressure rise is being done in the stator.

Blade Spacing & Blockage

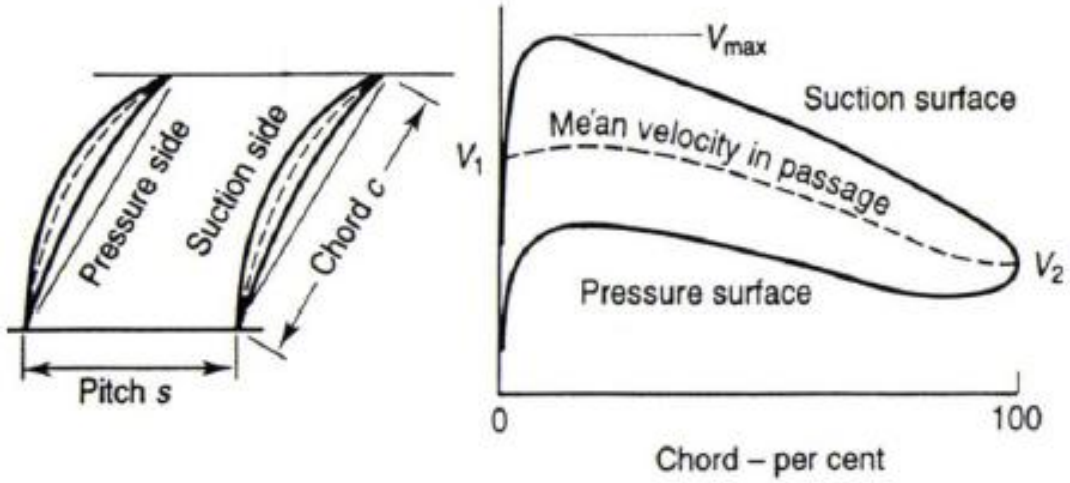

Blade spacing and velocity distribution through passage

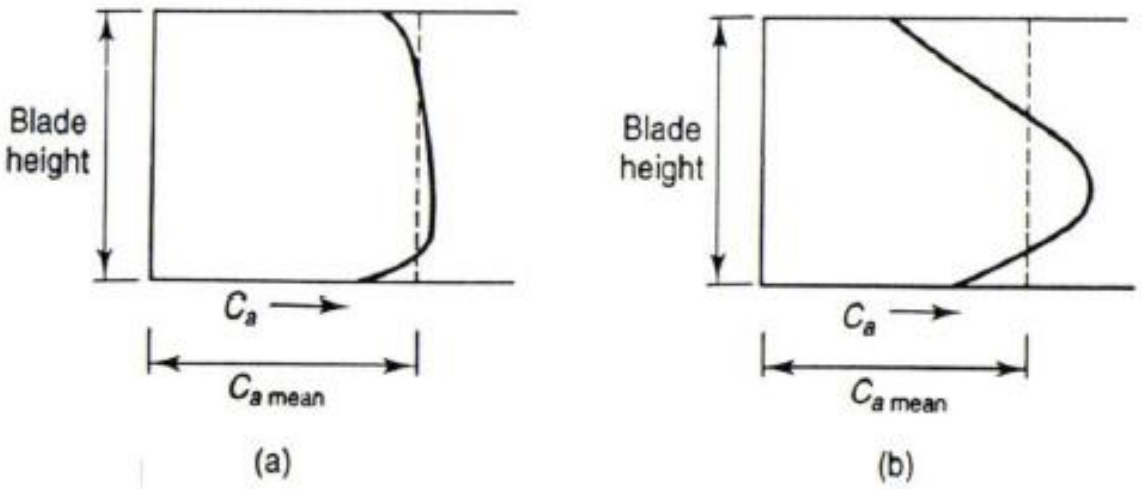

Axial velocity distributions: (a) at first stage, (b) at fourth stage

Pitch/Chord ratio: if too high, leads to separation, loss, and poor flow directional control.

Because of adverse pressure ratio, boundary layers build on outer/inner walls leading to peaky radial velocity profile. Blade design must allow for this. Reduces total enthalpy rise and hence pressure ratio.

Use of CFD to improve design

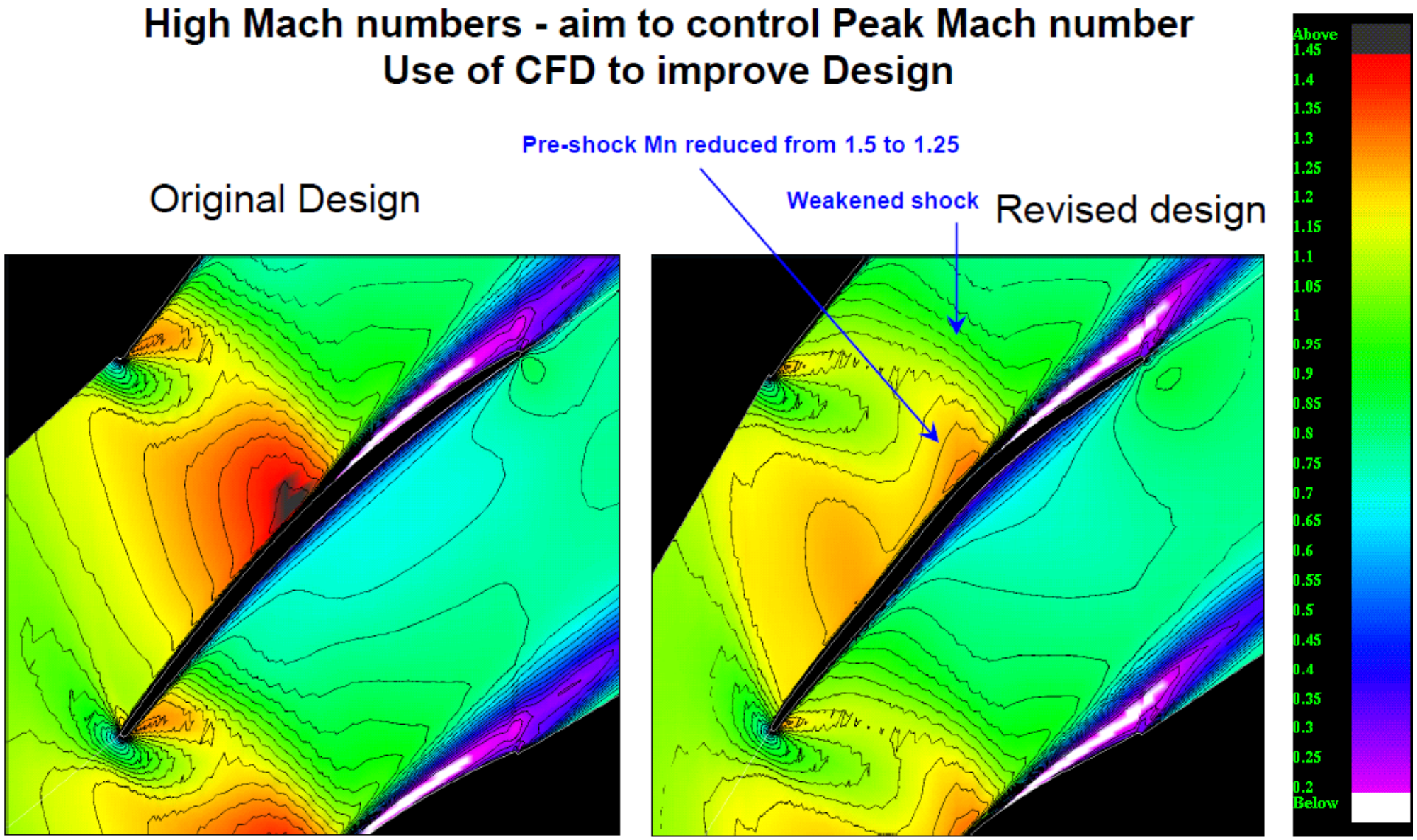

Dimensional Relationships

	Non-Dimensional	Quasi-dimensionless Group
1. Flow Velocity	$\frac{C}{\sqrt{\gamma R T}}$	$\frac{C}{\sqrt{T}}$
2. Rotational Speed	$\frac{ND}{\sqrt{RT_o}}$	$\frac{N}{\sqrt{T_o}}$
3. Mass Flow	$\frac{m\sqrt{RT_o}}{Ap_o}$	$\frac{m\sqrt{T_o}}{p_o}$

Generalised Compressor Characteristics

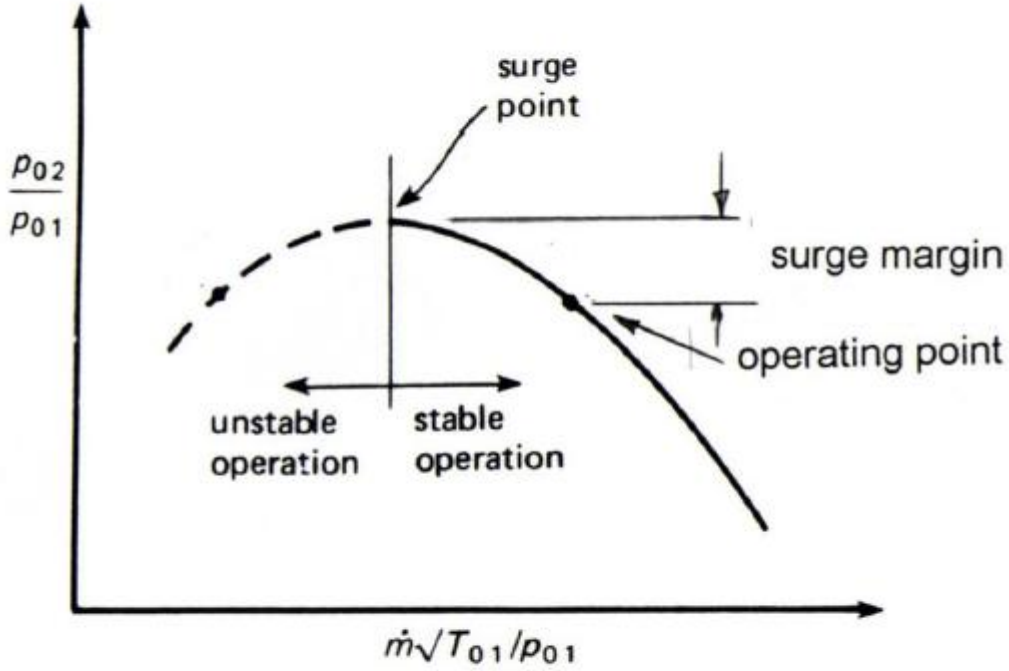

Simplified constant speed characteristic

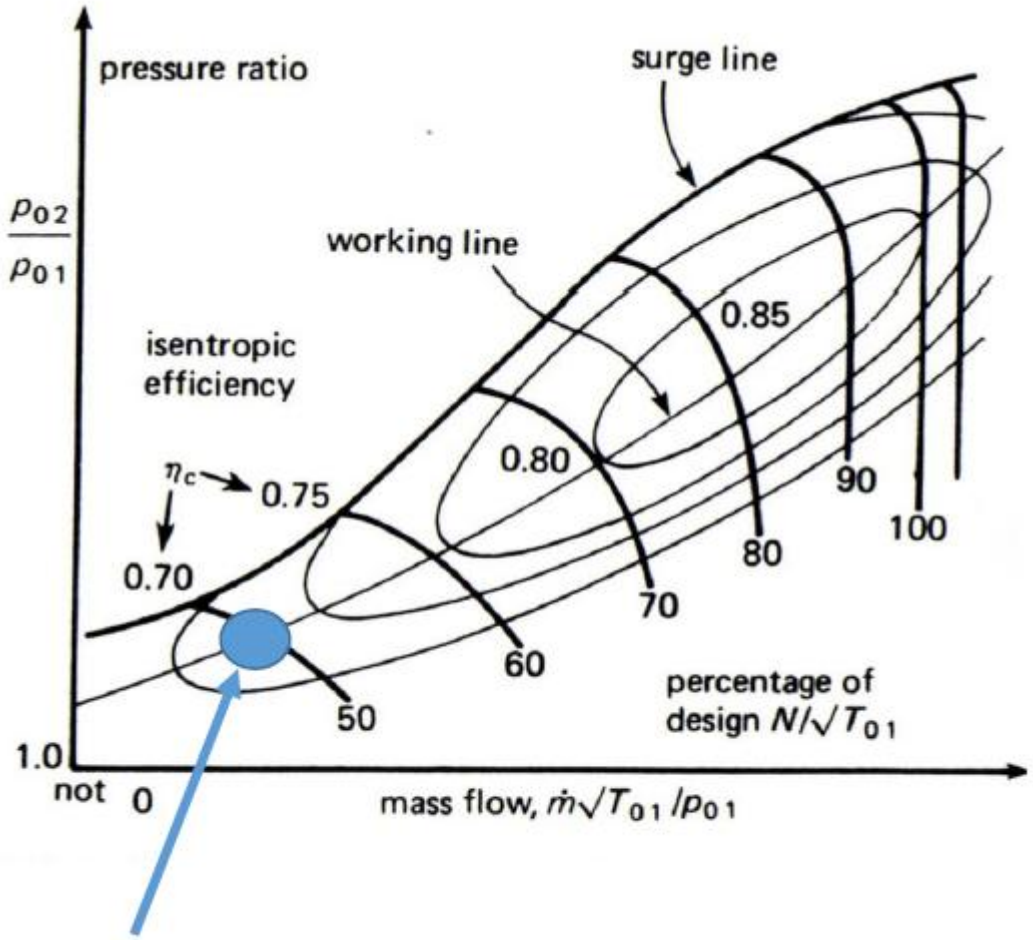

Self sustained speed

Typical three spool compressor

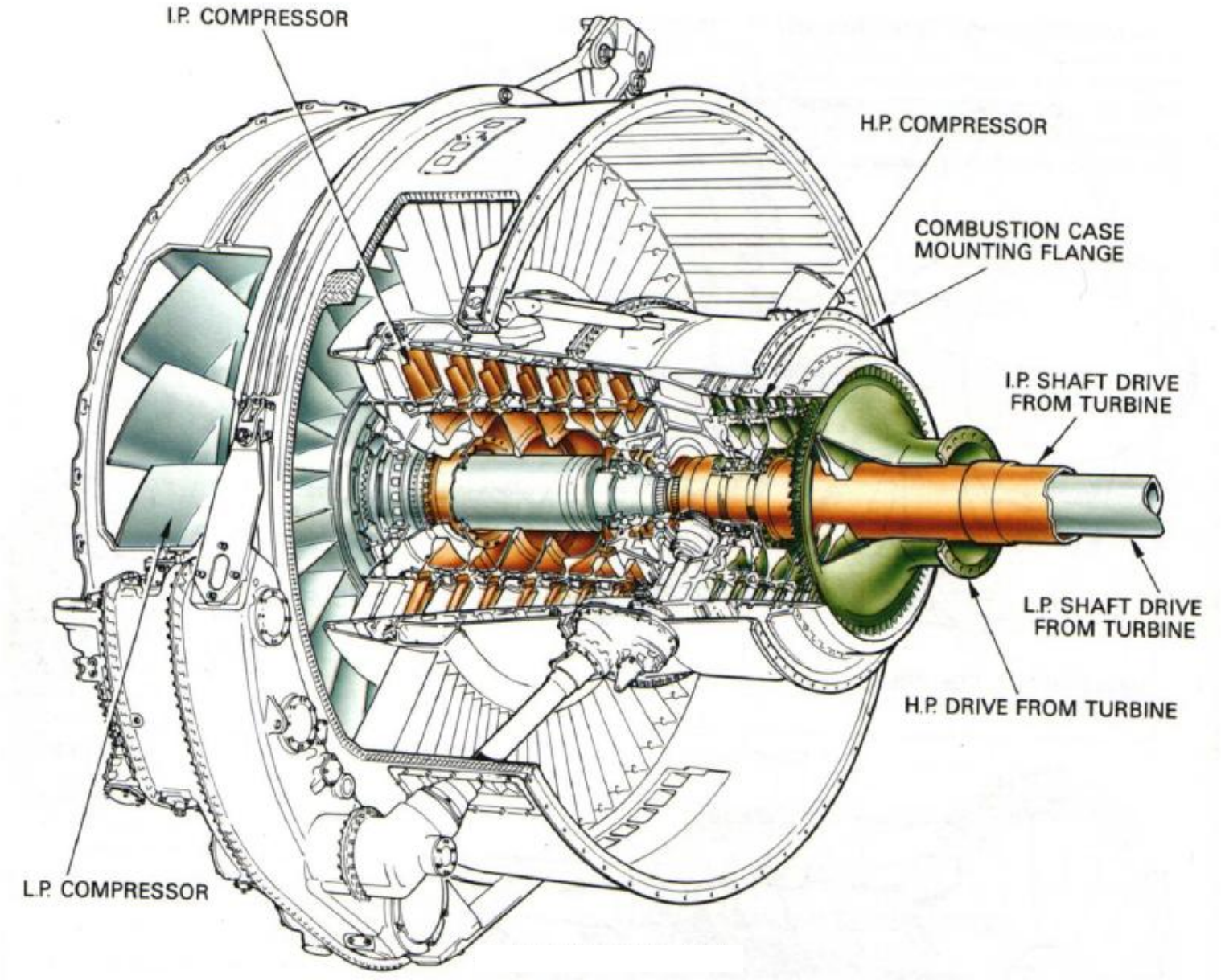

Typical Rotor Blades & Methods of Fixing

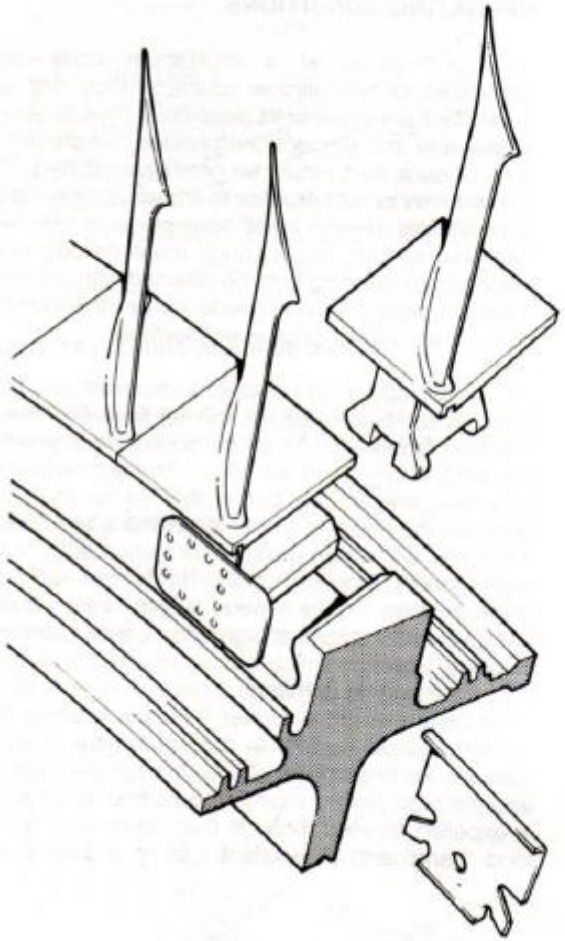

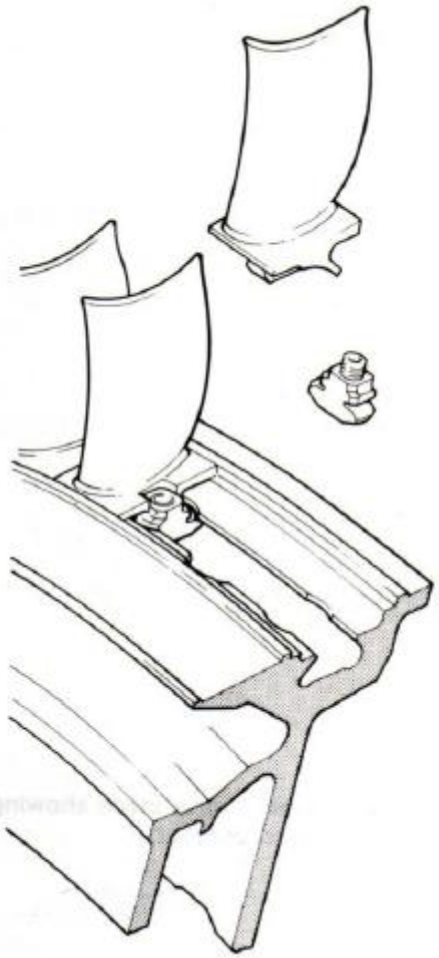

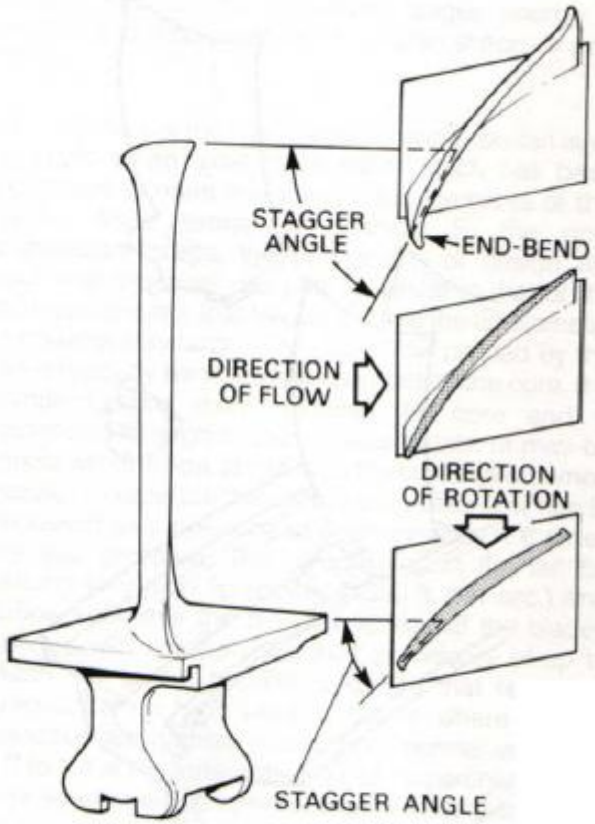

Variable Stator Vanes

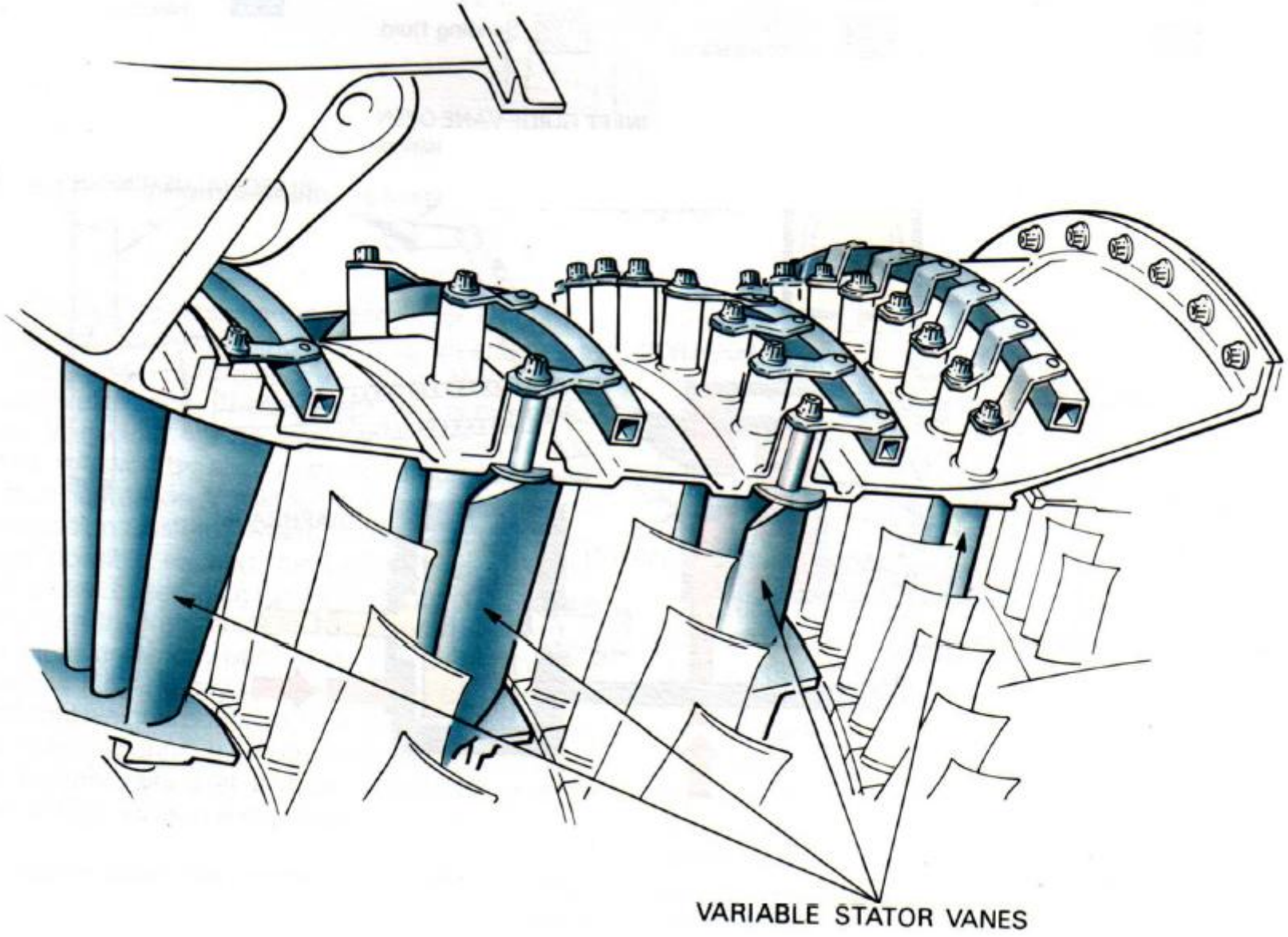

Fans

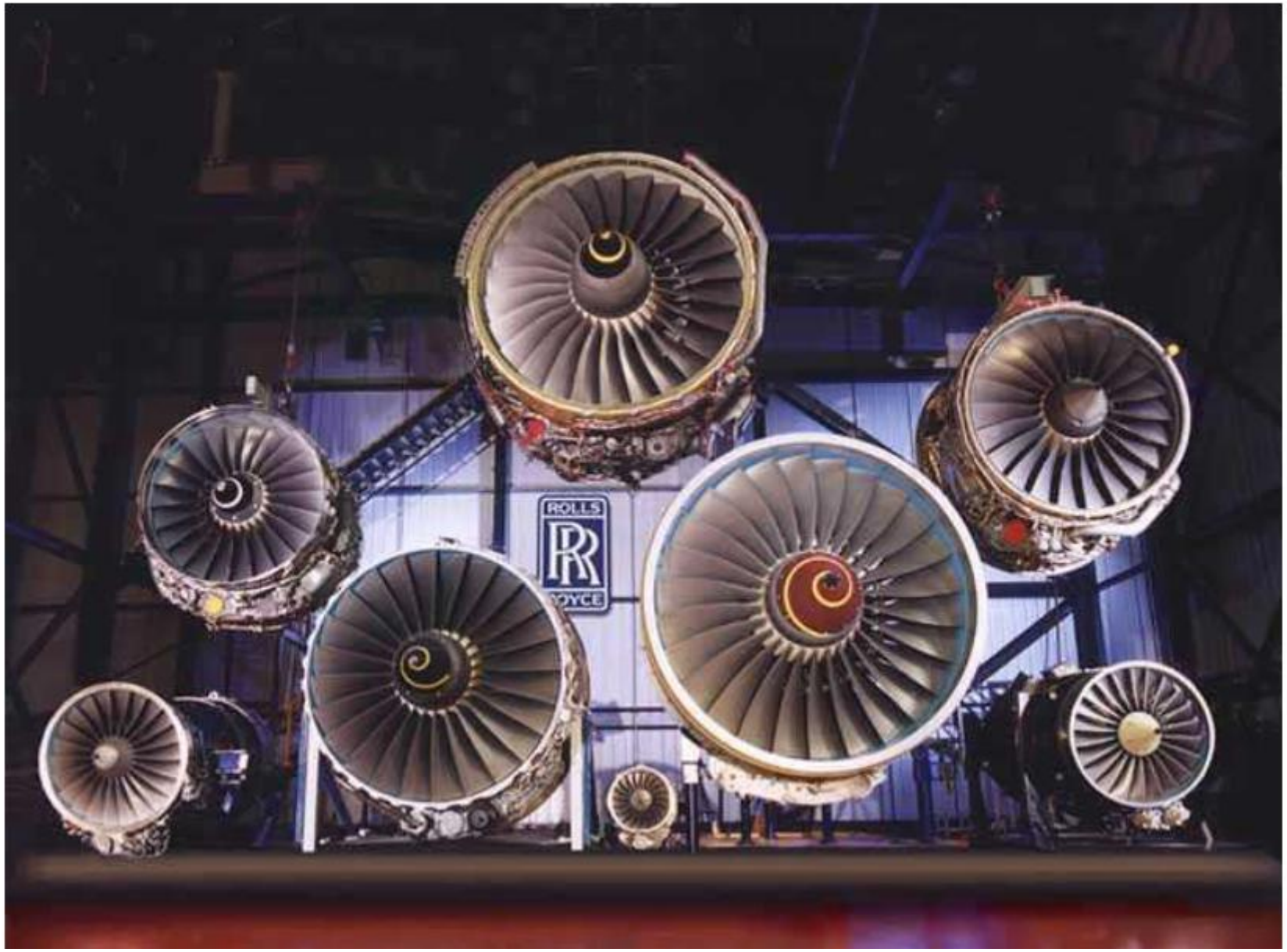

Single Stage Fans

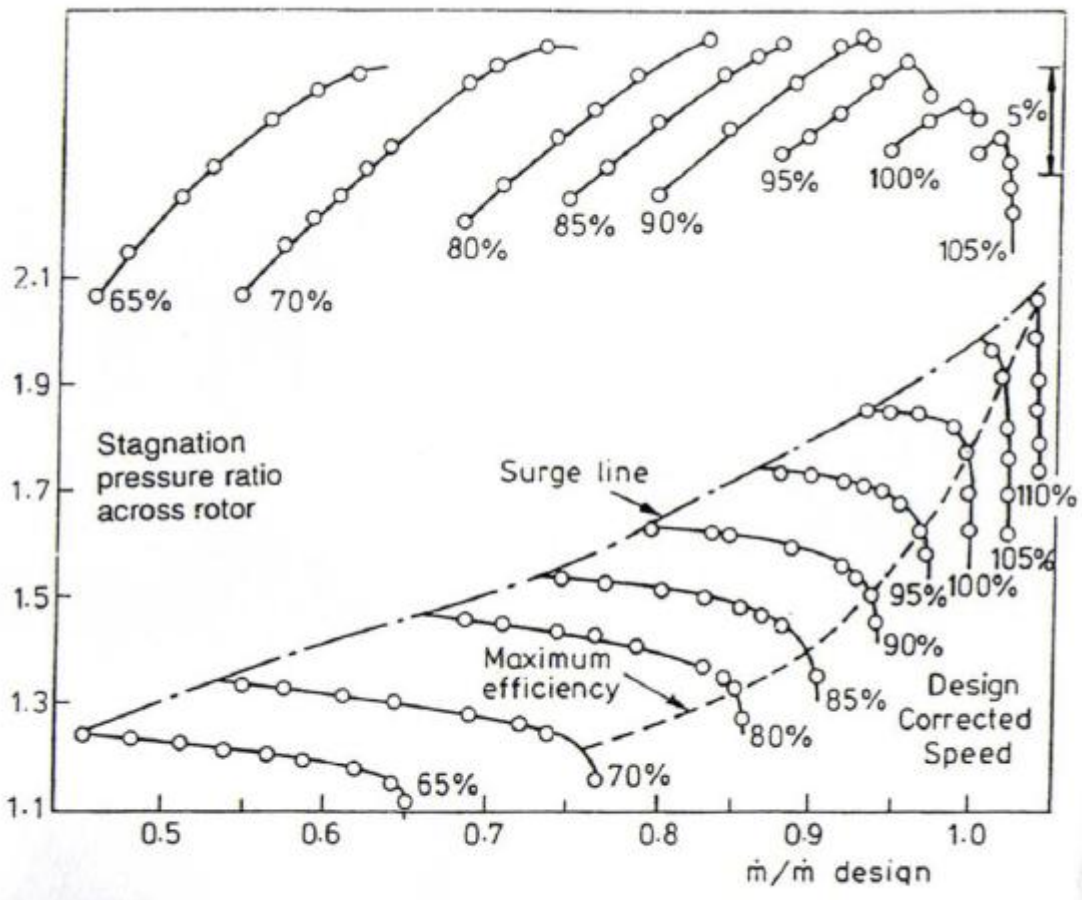

Typical fan characteristic

Fan blades

Fan Blade technology

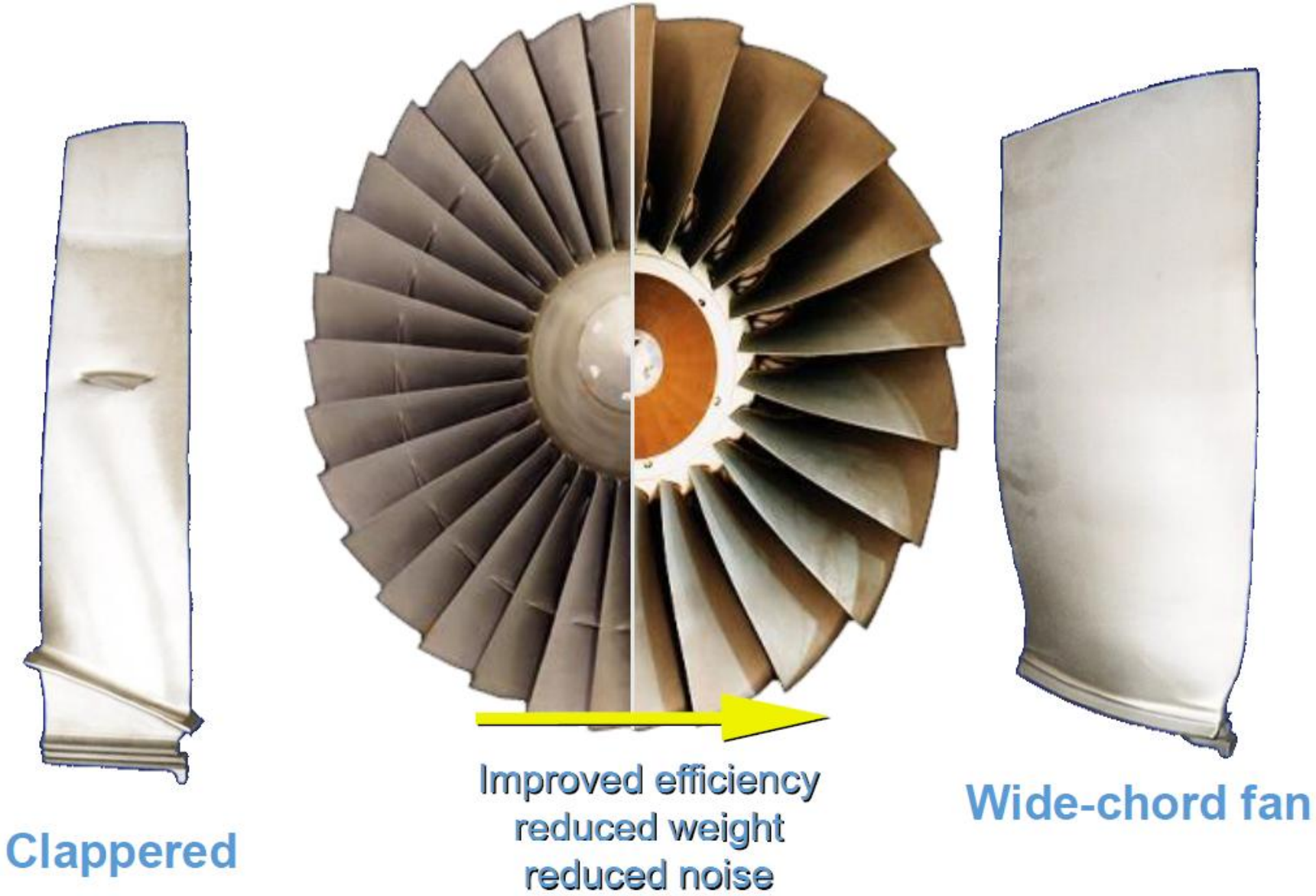

Fans - Some Numbers

University of BRISTOL

Large Civil Turbofan Engine

- Thrust 355kN
- Mass flow 1125kg/sec
- Volume flow 990m^3/sec
- Shaft speed 3200 rpm
- Fan Diameter 2.8m
- By-pass ratio Approx 8:1

- Centrifugal force on each blade equivalent to the weight of a fully laden B757 aircraft

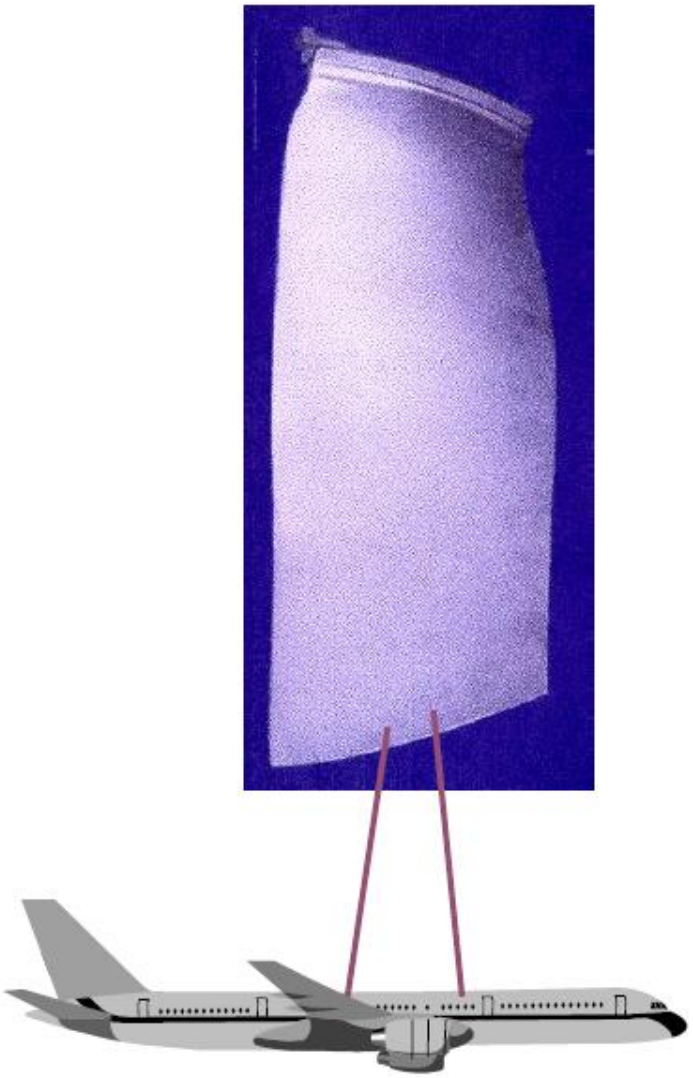

Wide Chord Fan: Hollow Construction

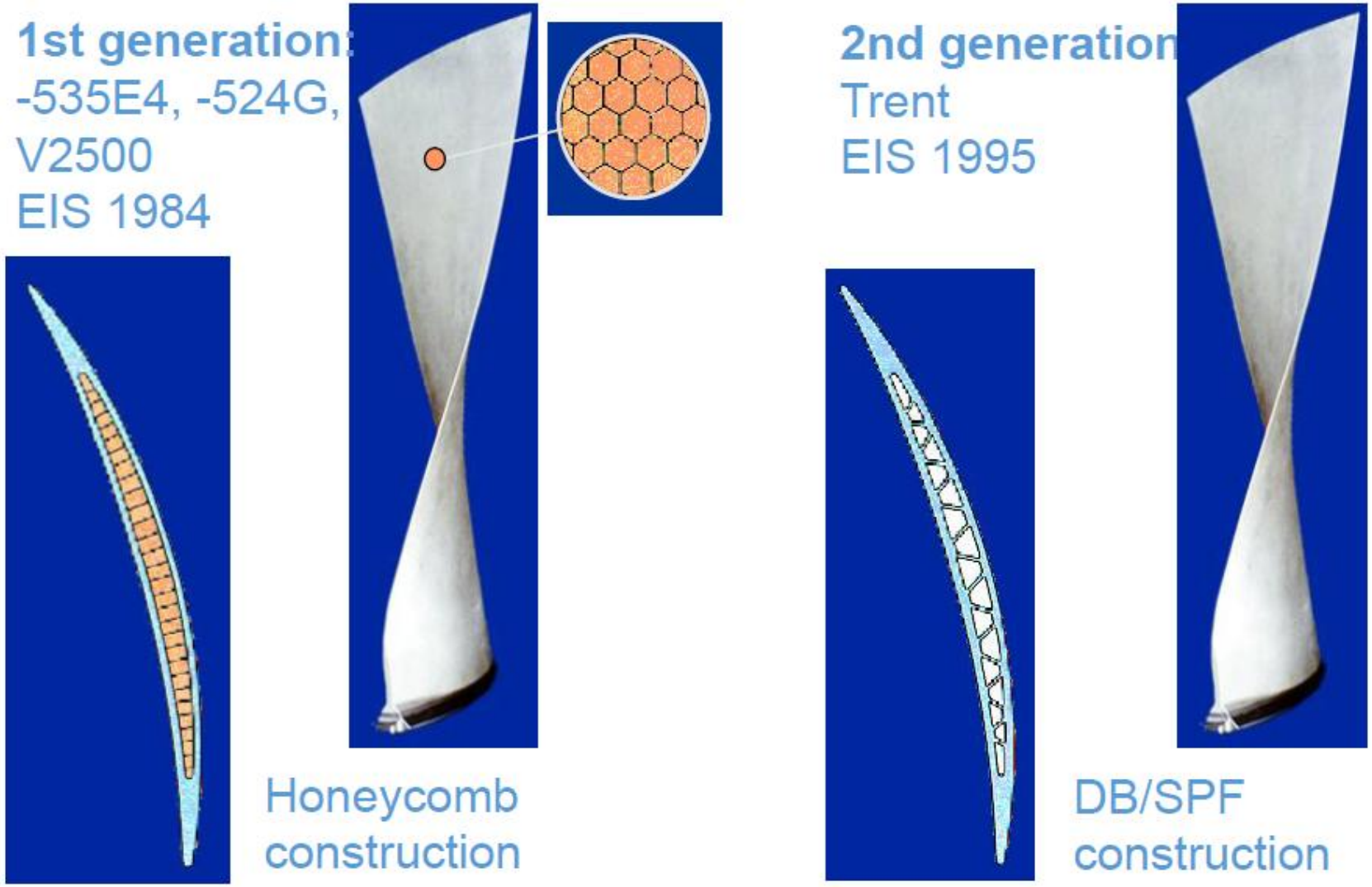

Key take-aways of Lecture 7

University of BRISTOL

- Basic analysis of Axial Compressors
- Velocity triangles of a compressor stage
- Isentropic efficiency and pressure ratios
- Types of compressor blades
- Fan blade technology

What's in Lecture 8?

Introduction to Turbines in Aircraft Propulsion

To describe the workings of the Turbine